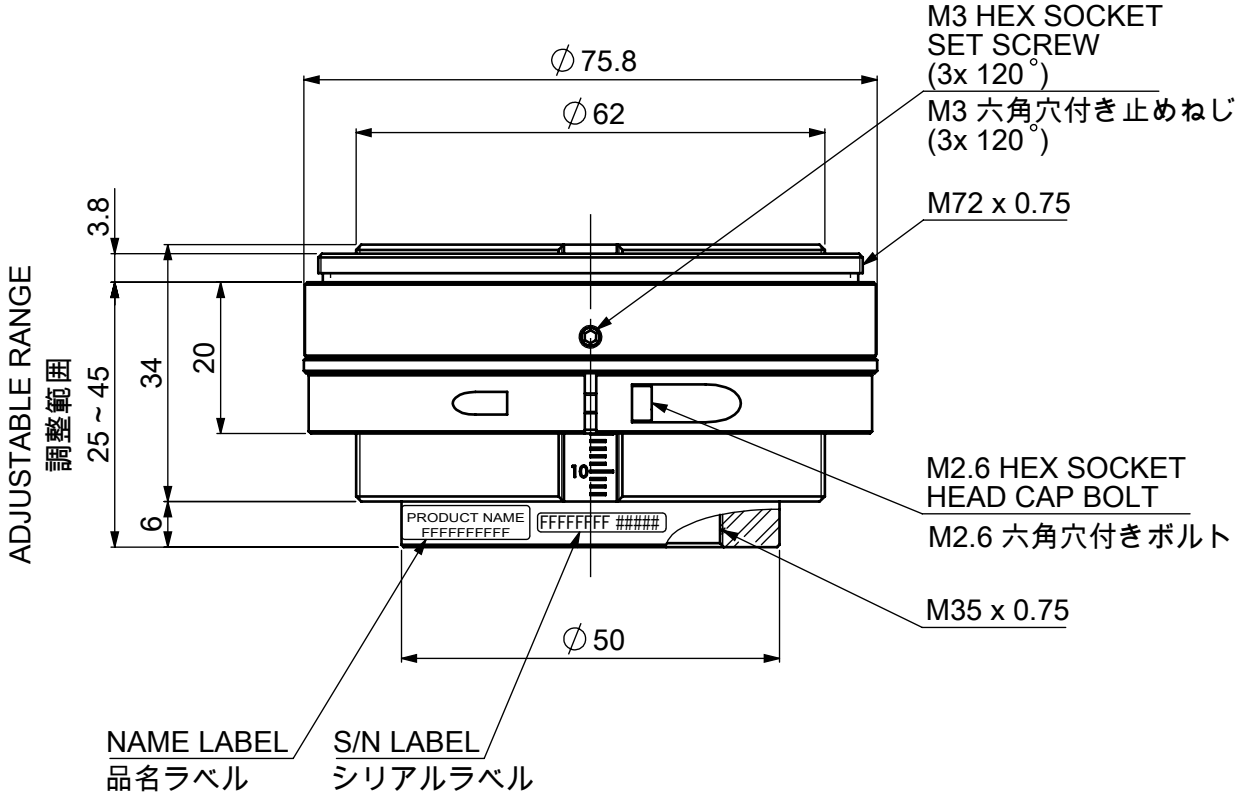

Model Name : ML-5540-TUBE-M72

MORITEX CORPORATION