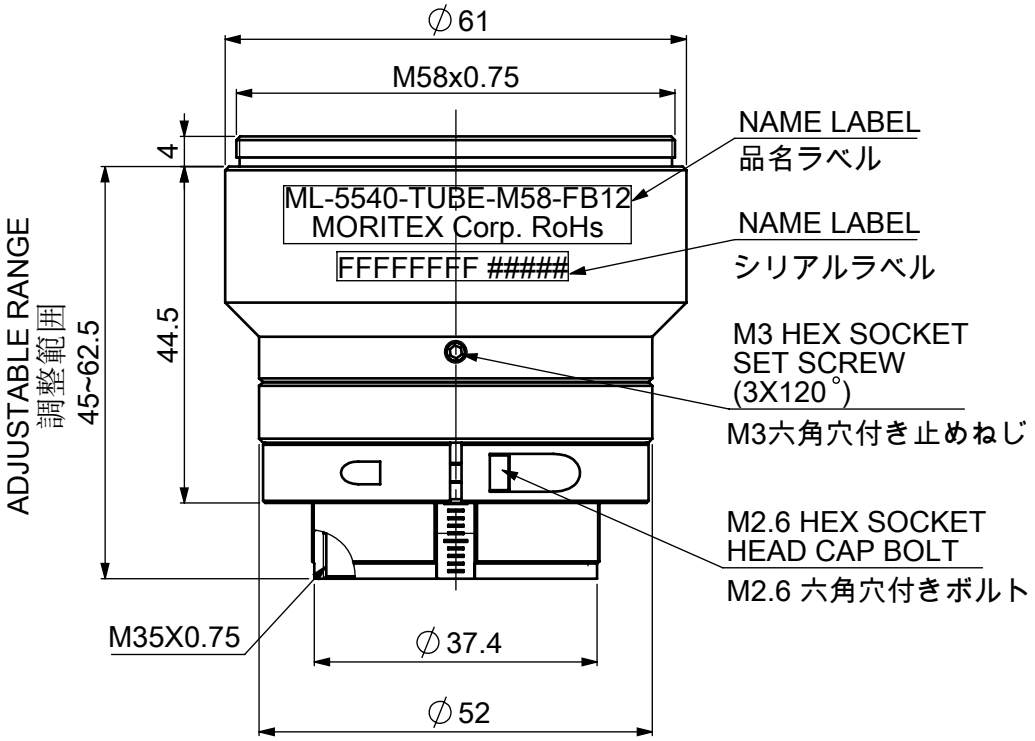

Model Name : ML-5540-TUBE-M58-FB12

MORITEX CORPORATION