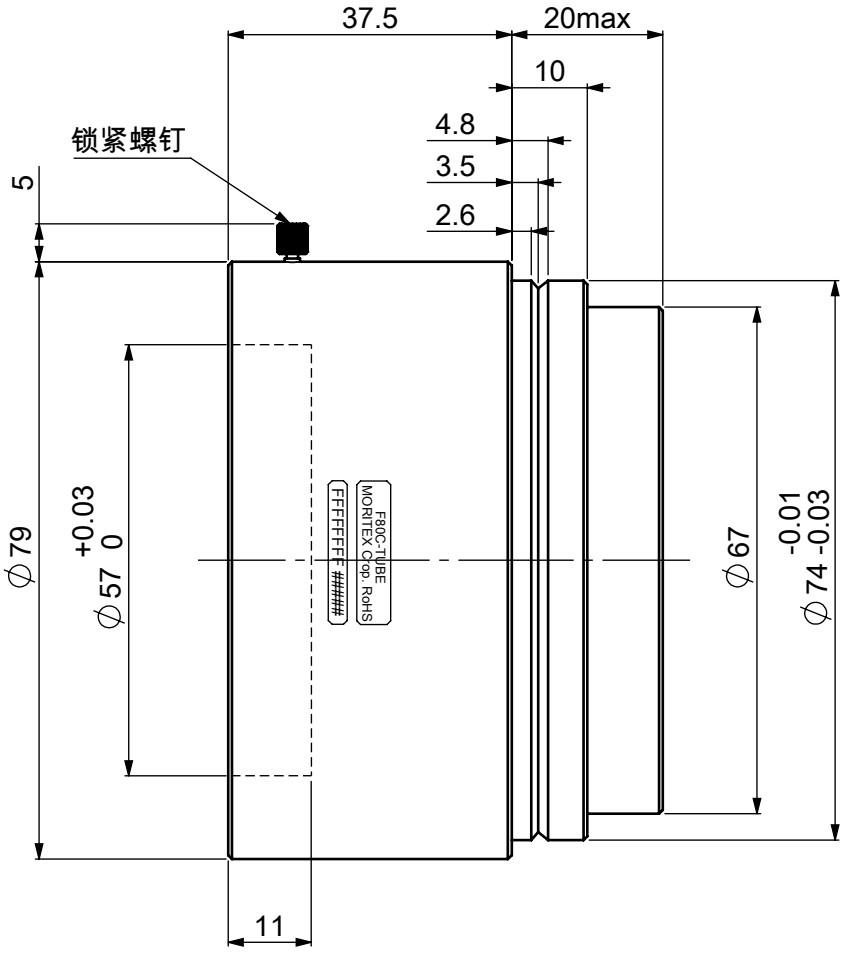

Model Name : F80C-TUBE-V74-AD

MORITEX CORPORATION