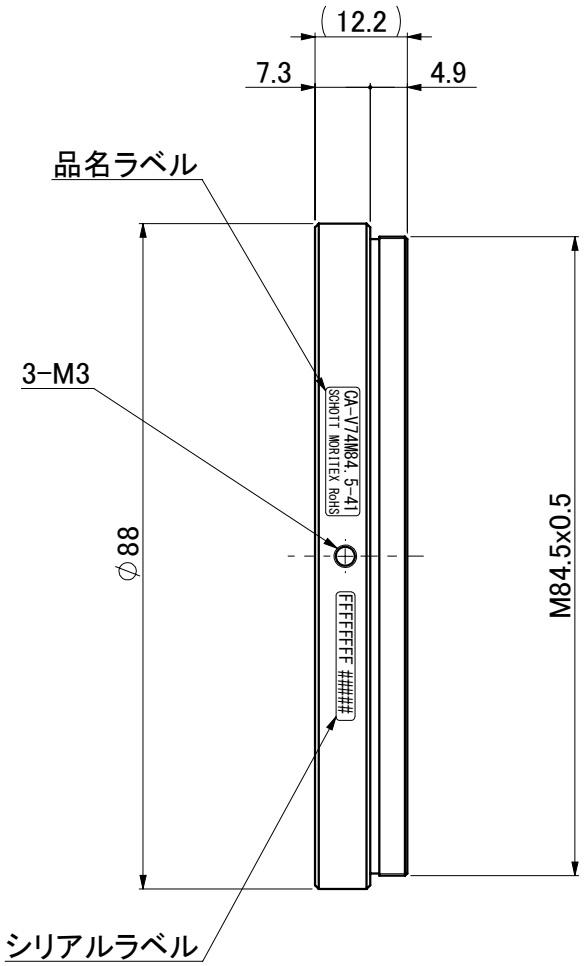

Model Name : CA-V74M84.5-41
MORITEX CORPORATION