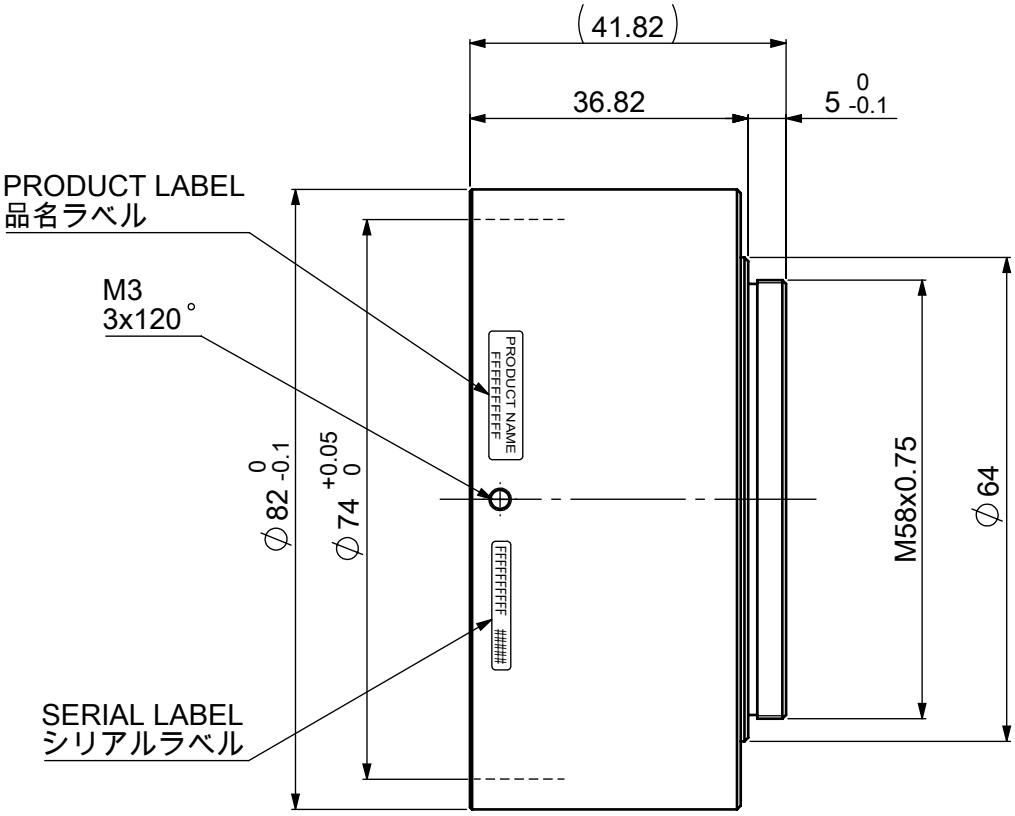

Model Name : CA-V74M58-11.48

MORITEX CORPORATION