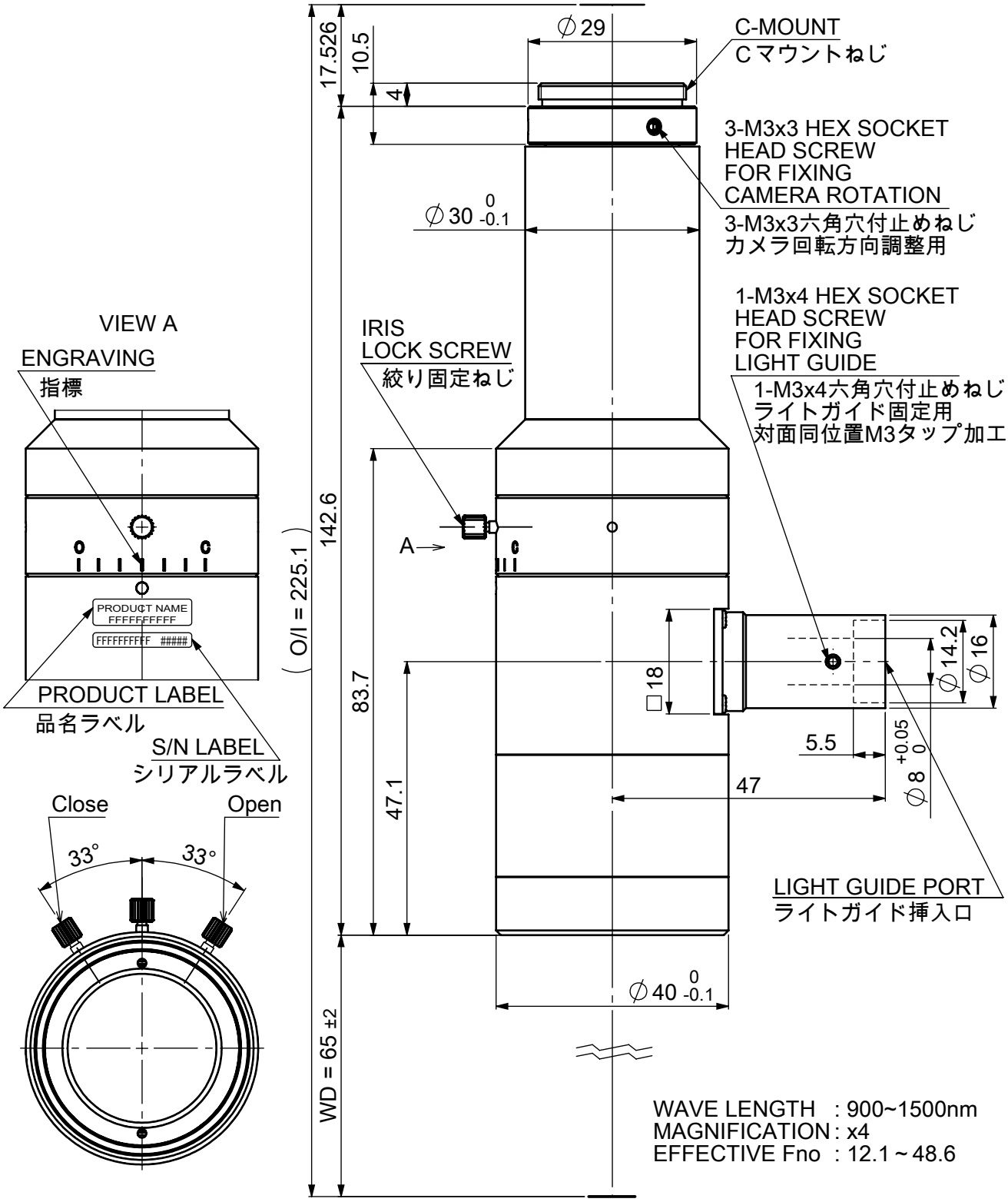

Model Name : MML4-HR65DVI-5M-SW

MORITEX CORPORATION