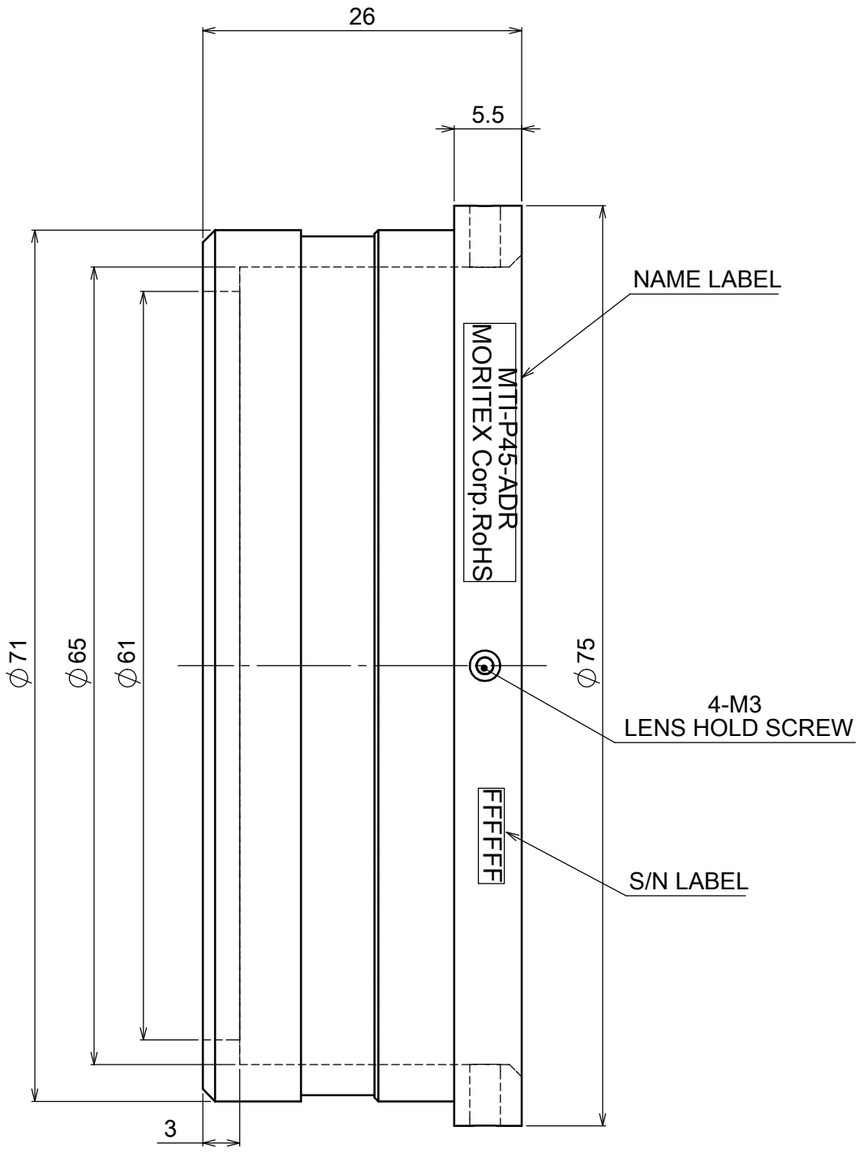

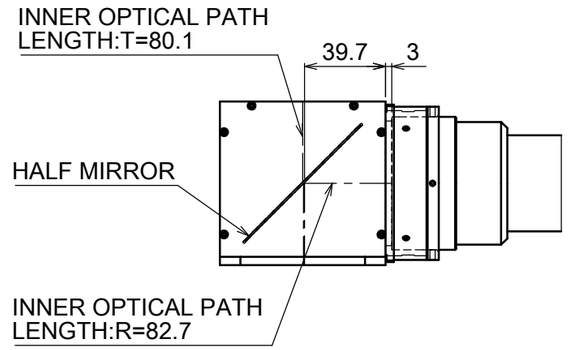

ASSEMBLY VIEW

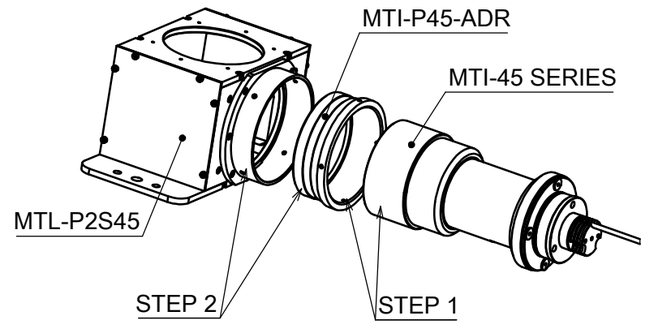

EXPLODED VIEW

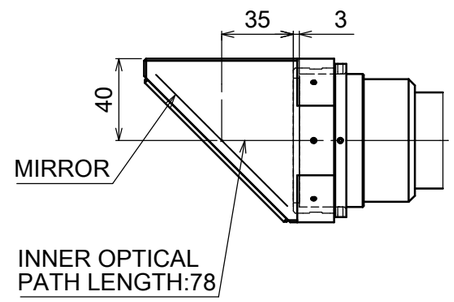

ASSEMBLY VIEW

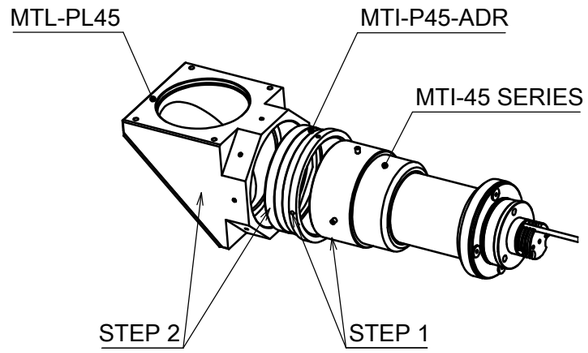

EXPLODED VIEW

ASSEMBLY SEQUENCE:
STEP1 : ASSEMBLY MTI-P45-ADR AND MTI-45 SERIES.
STEP2 : ASSEMBLY MTL-P2S45(MTL-PL45) AND MTI-P45-ADR.

INSTRUCTION FOR USE

Model Name : MTI-P45-ADR
MORITEX CORPORATION