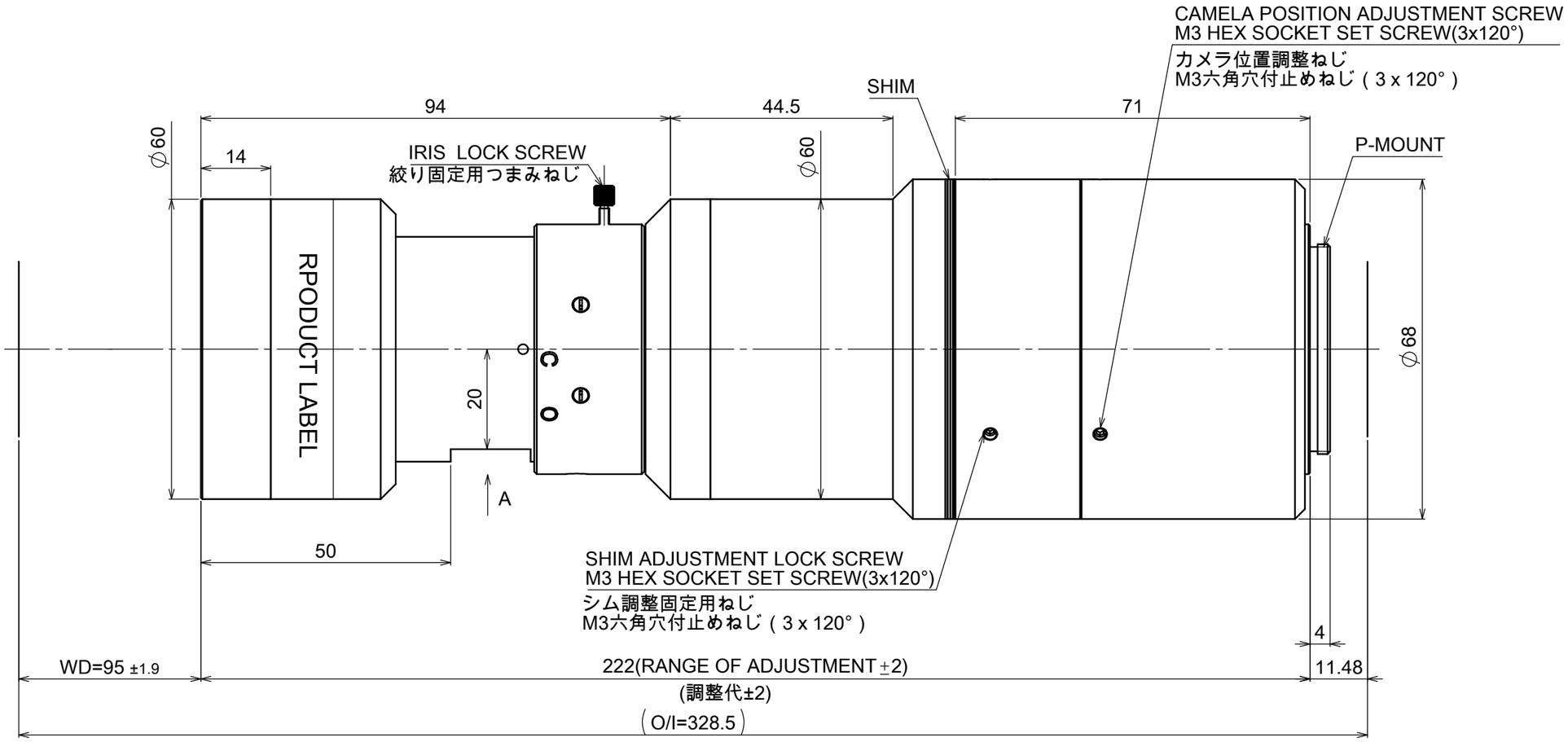

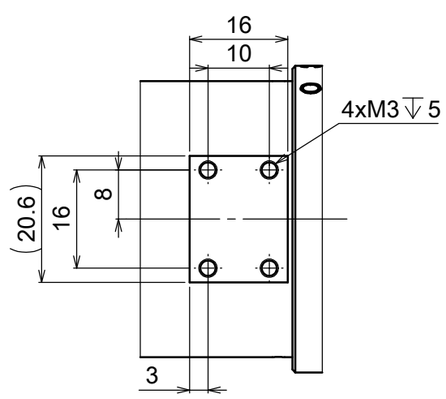

VIEW A

MAGNIFICATION : 1.00x
光学倍率 : 1.00x

Model Name : MTL-3535P-100
MORITEX CORPORATION