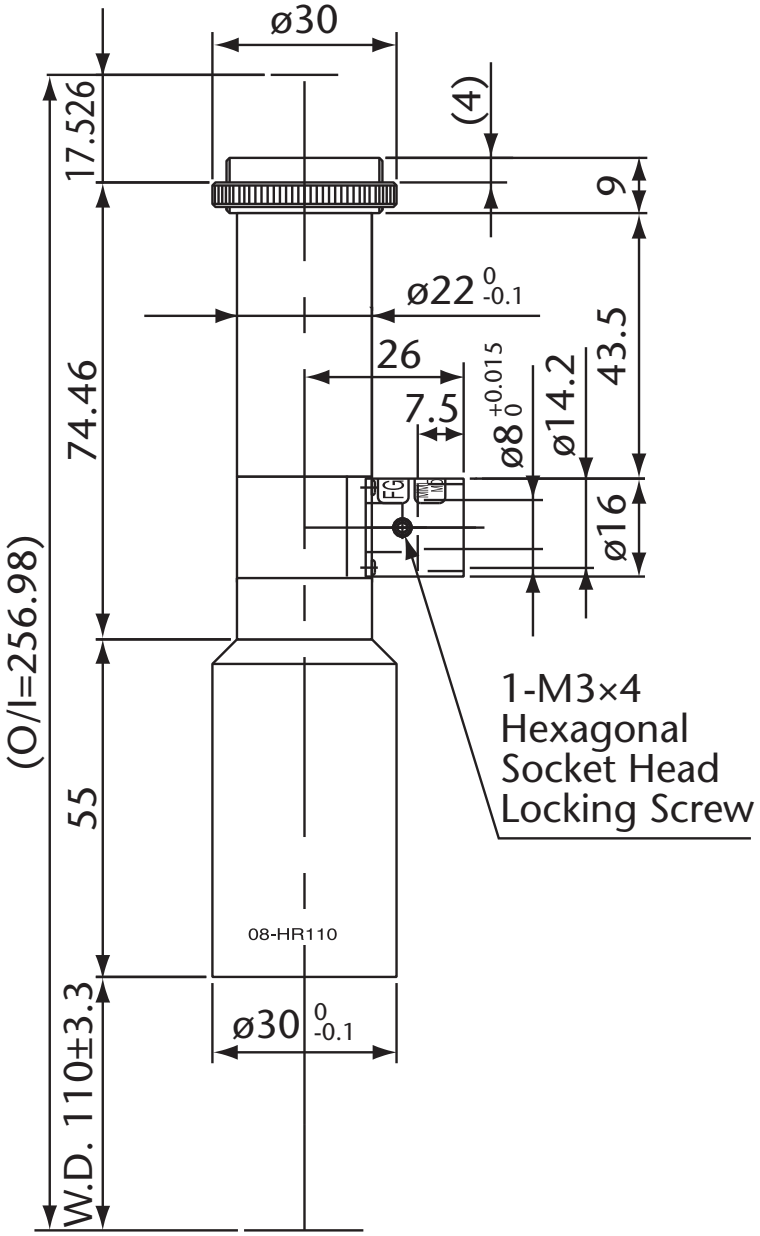

Model Name : MML08-HR110D
SCHOTT MORITEX Corporation