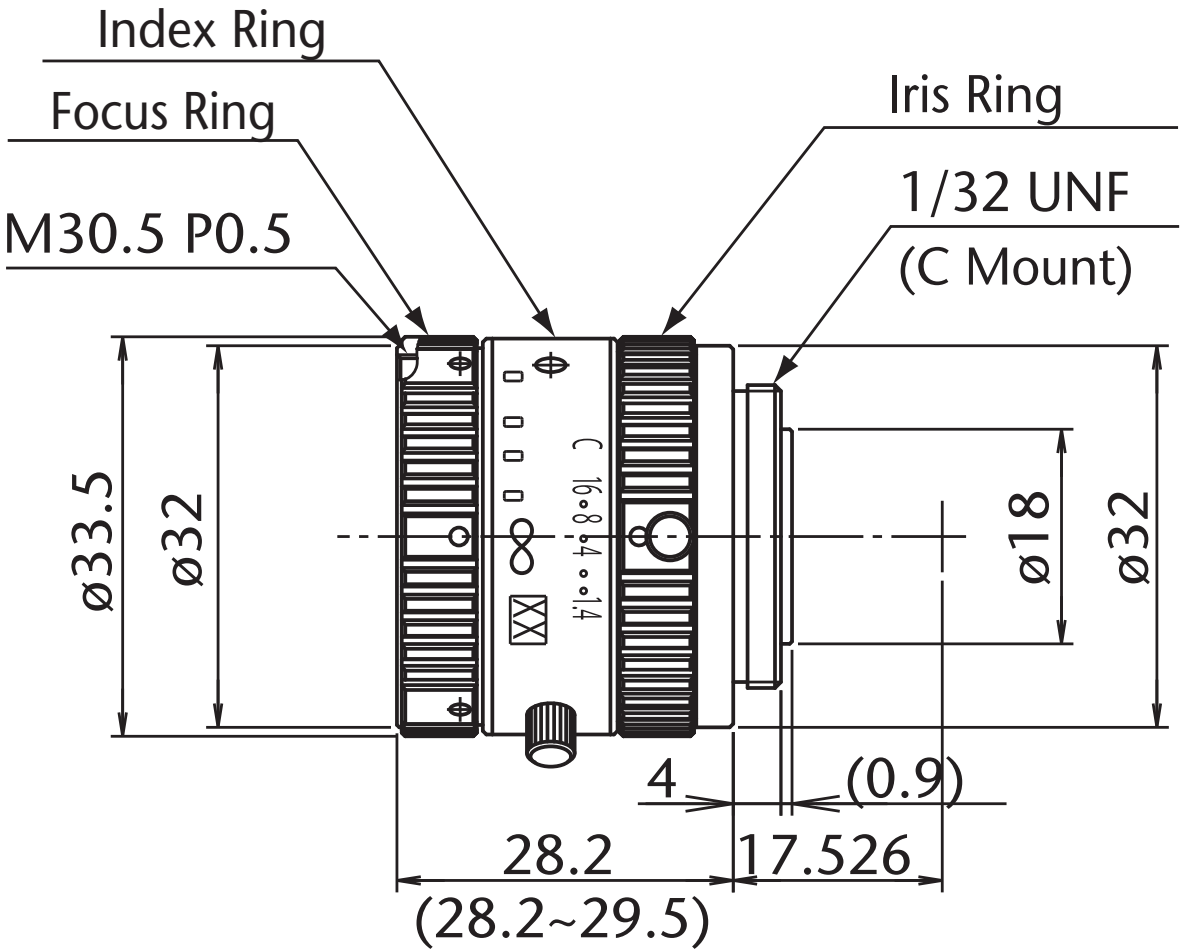

Model Name : ML-M1614MP
SCHOTT MORITEX Corporation