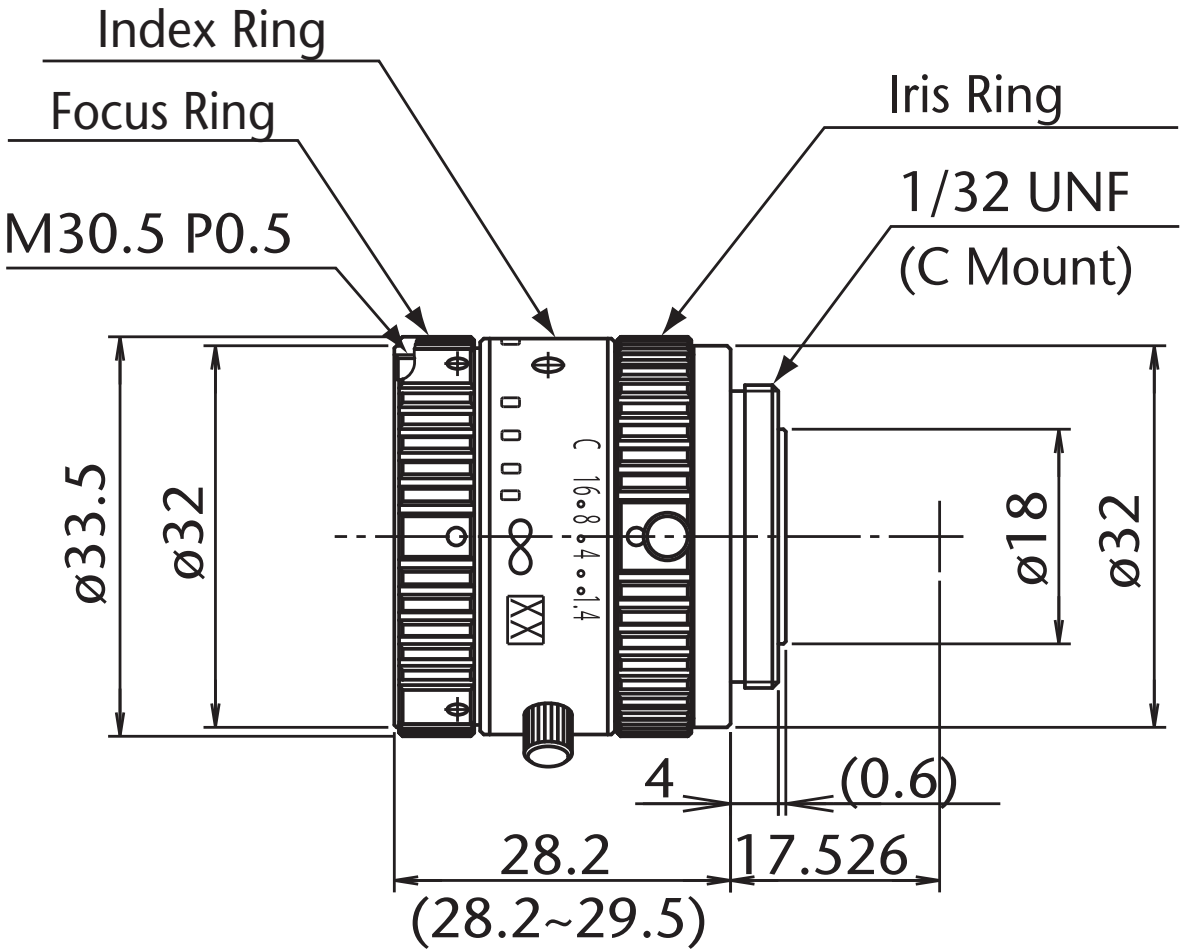

Model Name : ML-M0814MP
SCHOTT MORITEX Corporation